ASSMEBLY INSTRUCTION

(A) X1



(B) X1



(C) X1

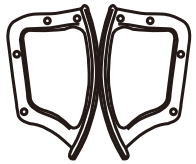

(D) X1

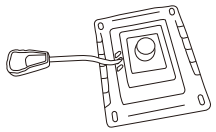

(E) X1

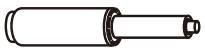

(F) X1

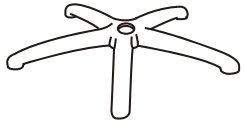

(G) X5



(H) X4



6X20MM

(I) X8



6X25MM

(J) X1



(K) X8



(L) X1



M6

①

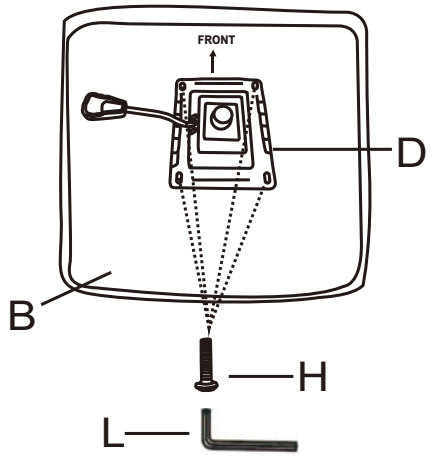

②

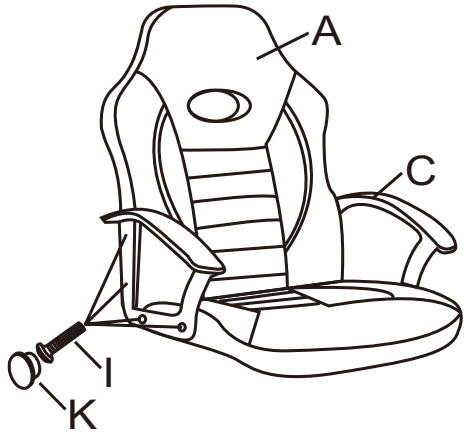

③

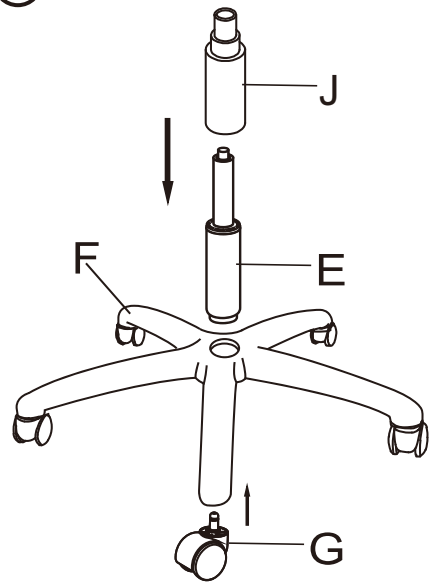

④

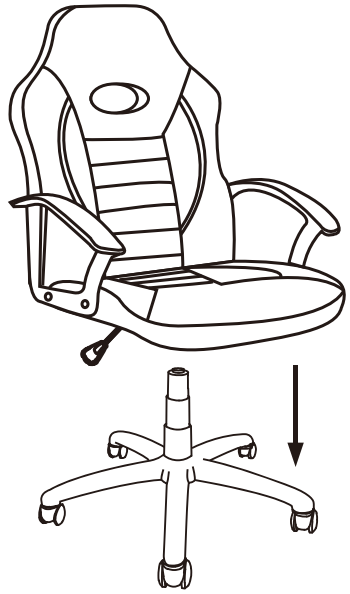

⑤

