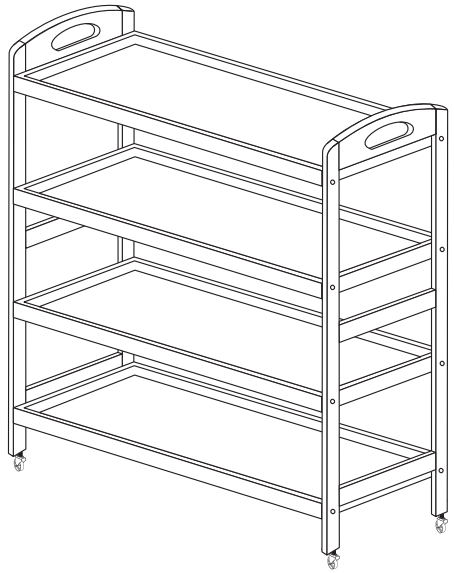

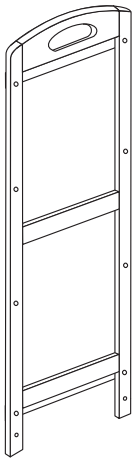

Ax2pcs

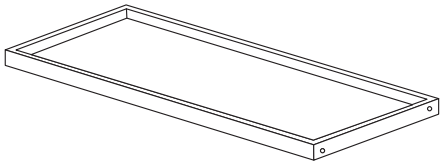

Bx4ps

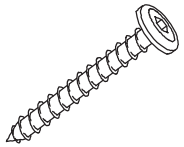

Cx16pcs

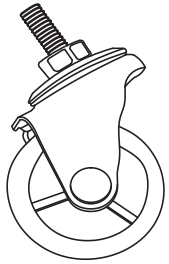

Dx4pcs

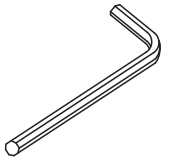

Fx1pc

①

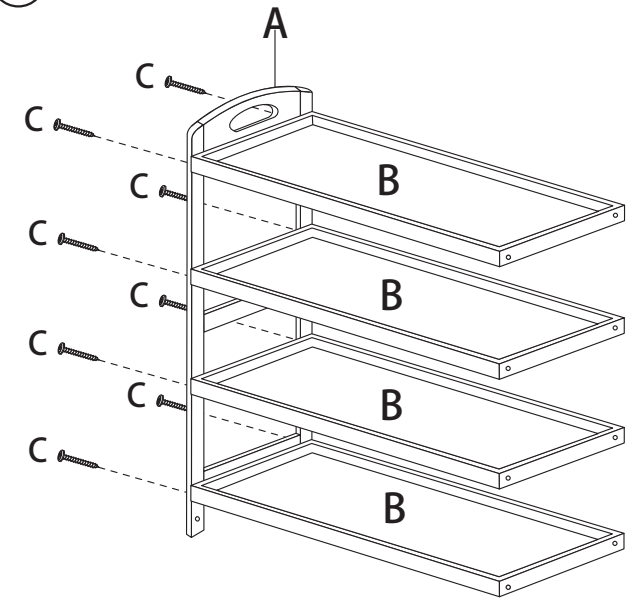

②

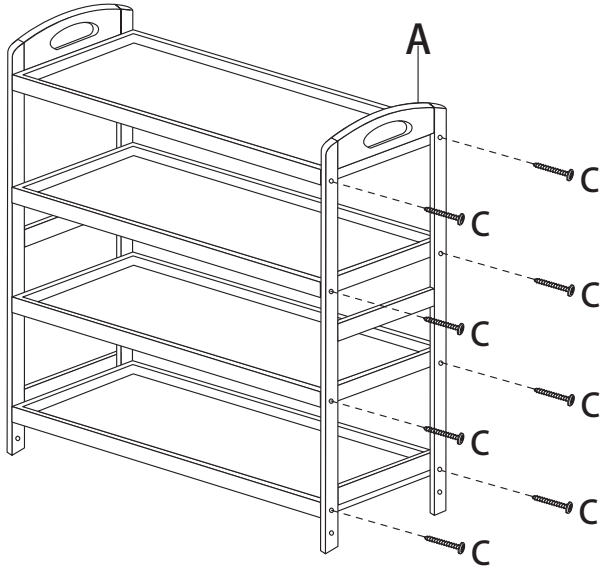

③

